# BC66 Reference Design

**LPWA Module Series**

Rev. BC66_Reference_Design_V1.1

Date: 2019-02-21

Status: Released

**Our aim is to provide customers with timely and comprehensive service. For any assistance, please contact our company headquarters:**

**Quectel Wireless Solutions Co., Ltd.**
7th Floor, Hongye Building, No.1801 Hongmei Road, Xuhui District, Shanghai 200233, China
Tel: +86 21 5108 6236
Email: info@quectel.com

**Or our local office. For more information, please visit:**
http://www.quectel.com/support/sales.htm

**For technical support, or to report documentation errors, please visit:**
http://www.quectel.com/support/technical.htm
Or email to: support@quectel.com

## GENERAL NOTES

QUECTEL OFFERS THE INFORMATION AS A SERVICE TO ITS CUSTOMERS. THE INFORMATION PROVIDED IS BASED UPON CUSTOMERS' REQUIREMENTS. QUECTEL MAKES EVERY EFFORT TO ENSURE THE QUALITY OF THE INFORMATION IT MAKES AVAILABLE. QUECTEL DOES NOT MAKE ANY WARRANTY AS TO THE INFORMATION CONTAINED HEREIN, AND DOES NOT ACCEPT ANY LIABILITY FOR ANY INJURY, LOSS OR DAMAGE OF ANY KIND INCURRED BY USE OF OR RELIANCE UPON THE INFORMATION. ALL INFORMATION SUPPLIED HEREIN IS SUBJECT TO CHANGE WITHOUT PRIOR NOTICE.

## COPYRIGHT

# About the Document

## History

| Revision | Date | Author | Description |
|---|---|---|---|
| 1.0 | 2018-08-27 | Speed SUN | Initial |
| 1.1 | 2019-02-21 | Speed SUN | 1. Updated the power supply block diagram of the module (Figure 1).<br>2. Reserved SPI interface and thus deleted all information of the interface.<br>3. Improved the design notes of "Battery Application" in Sheet 2.<br>4. Added USB interface design circuits in Sheet 5. |

# Contents

# 1 Reference Design

## 1.1. Introduction

This document is a reference design of BC66 module, including power supply, USIM, UART and USB interface designs.

## 1.2. Schematics

### 1.2.1. Power Supply Block Diagram

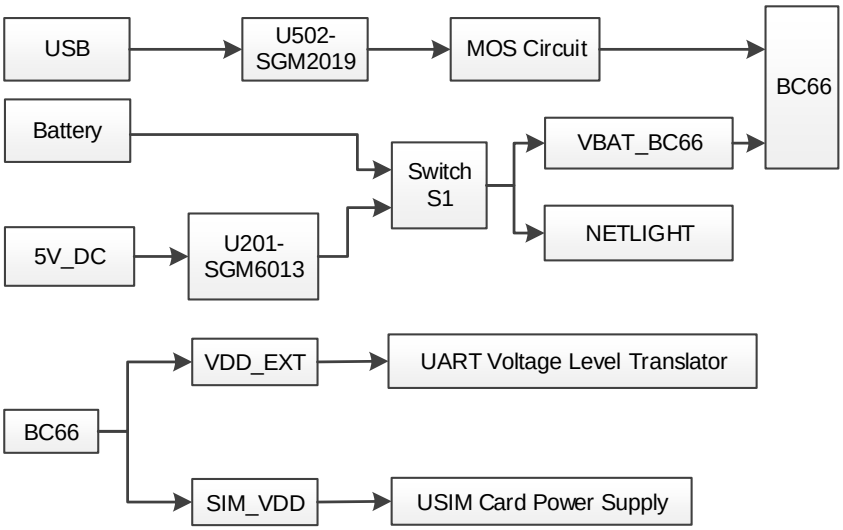


**Figure 1: Block Diagram of BC66 Power Supply**

### 1.2.2. Reference Designs

The schematics illustrated in the following pages are provided for your reference only.

# Module Interfaces

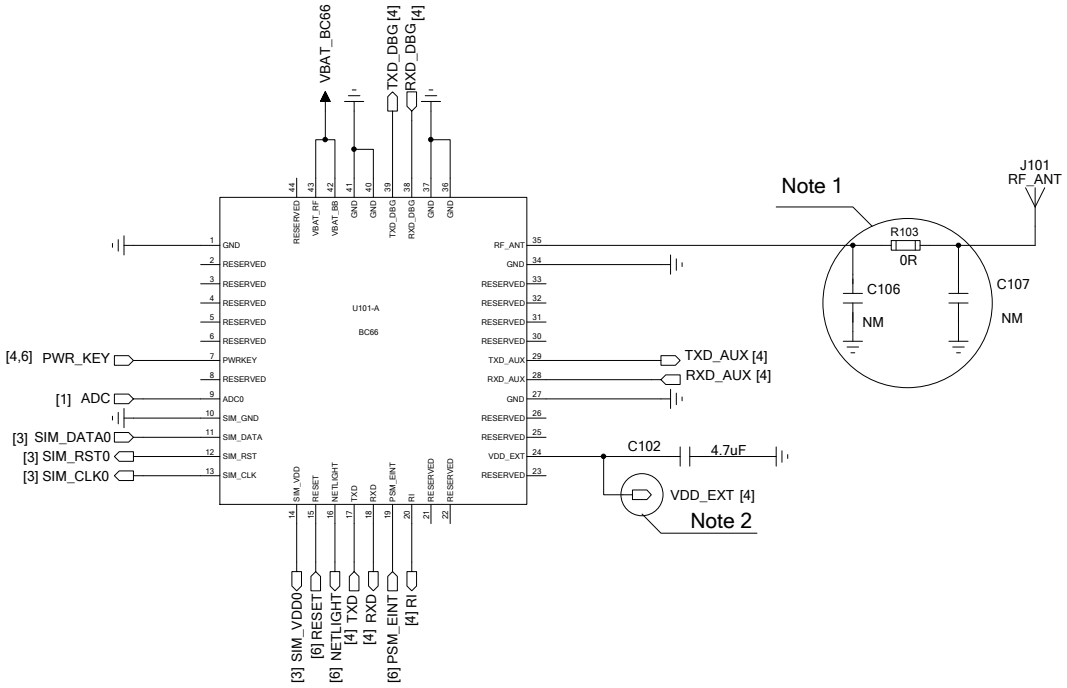


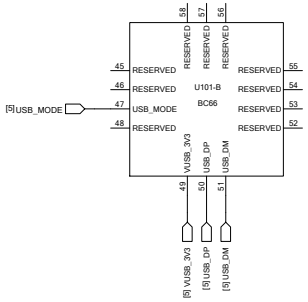


Notes:

1. A PI type matching circuit is recommended here. For more details about RF layout, please refer to *Quectel_RF_Layout_Application_Note.*
2. VDD_EXT is a 1.8V output power supply and has no voltage output in PSM. It is intended to supply power for the module's pull-up circuits, and is thus not recommended to be used as the power supply for external circuits.

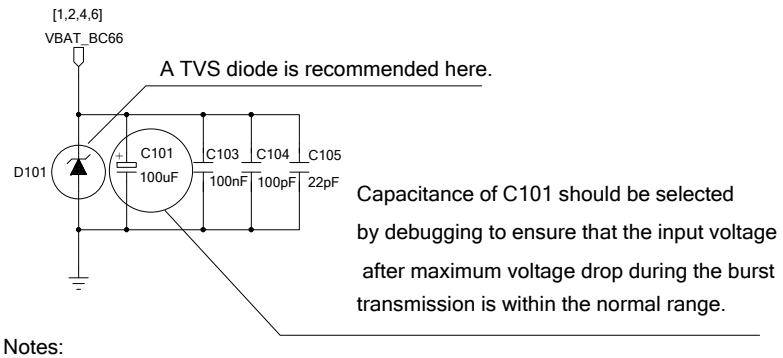


Notes:

1. The input voltage of VBAT ranges from 2.1V to 3.63V.
2. The width of VBAT trace is recommended to be greater than 0.5mm, and the longer the trace is, the wider it should be.
3. The capacitors should be placed in ascending order of the capacitance value, and the one with the minimum capacitance should be placed nearest the VBAT pins. Additionally, all these capacitors should be placed as close to the VBAT pins as possible.

## ADC Reference Circuit

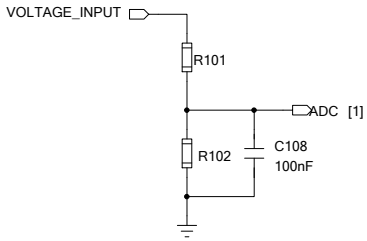


The maximum input voltage of 10-bit ADC is 1.4V.

| Quectel Wireless Solutions | | |
|---|---|---|
| DRAWN BY Speed SUN | PROJECT BC66 | TITLE Reference Design |
| CHECKED BY Storm BAO | SIZE A2 | VER 1.1 |
| | SHEET 1 OF 6 | DATE 2019/2/21 |

# Power Supply

## DC Power Supply

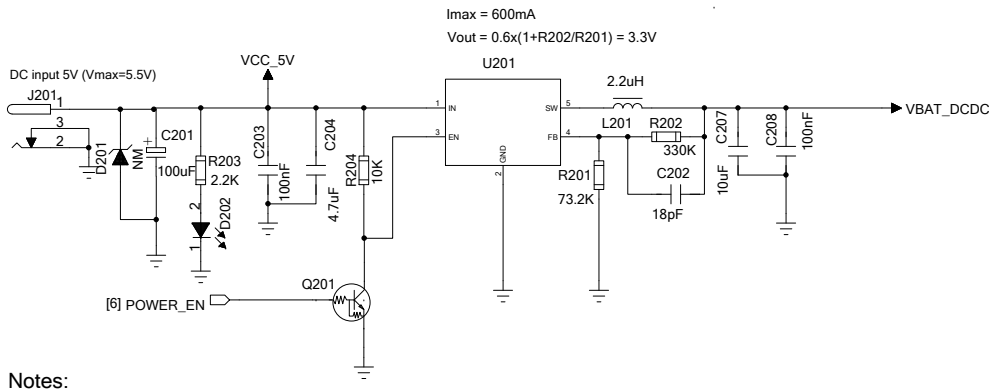


Notes:

1. The output current of power converter should be no less than 0.5A.
2. The recommended power management IC is SGM6013.

## Battery Application

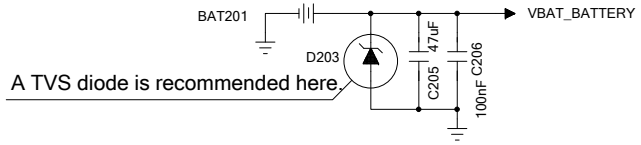


Notes:

1. The battery voltage shall range between 2.1V and 3.63V to meet the module's power supply requirements, and the battery's rated output current should be greater than the module's maximum current consumption. Additionally, it is recommended to do reverse battery protection to avoid damages to the module.
2. According to battery selection, the capacitance of C205 should be appropriately increased according to debugging results.

## Power Supply Selection

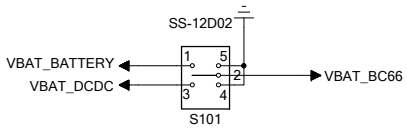


Notes:

1. S101 is used to switch between an external 5V power supply and battery power supply.
2. VBAT_BC66 ranges from 2.1V to 3.63V, and the typical value is 3.3V.

| Quectel Wireless Solutions | | |
|---|---|---|
| DRAWN BY Speed SUN | PROJECT BC66 | TITLE Reference Design |
| CHECKED BY Storm BAO | SIZE A2 | VER 1.1 |
| | SHEET 2 OF 6 | DATE 2019/2/21 |

# USIM Interface Design

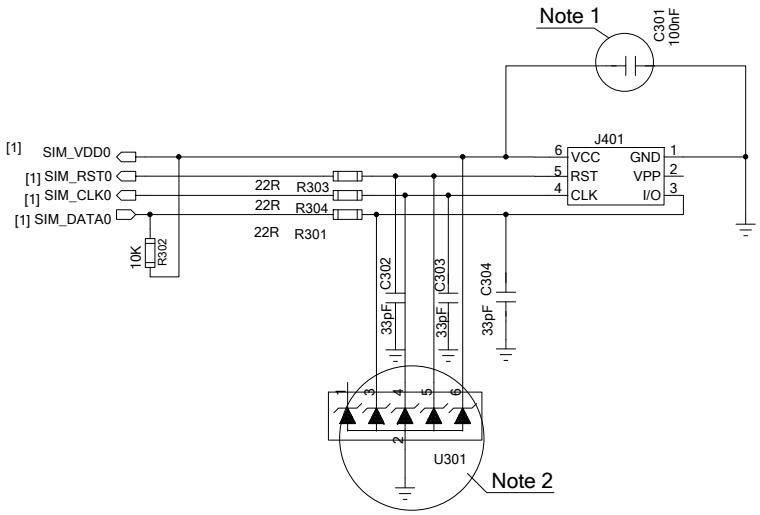


Notes:

1. The value of C301 should be less than 1uF.
2. U301 is used for protecting USIM interface against ESD and the junction capacitance should be less than 50pF. It should be placed nearby USIM card connector.
3. For more design guidelines, please refer to *Chapter 3.10* of *Quectel_BC66_Hardware_Design*.

| Quectel Wireless Solutions | | |
|---|---|---|
| DRAWN BY Speed SUN | PROJECT BC66 | TITLE Reference Design |
| CHECKED BY Storm BAO | SIZE A2 | VER 1.1 |
| | SHEET 3 OF 6 | DATE 2019/2/21 |

# UART Interface Design

## UART Level Translation - IC Solution

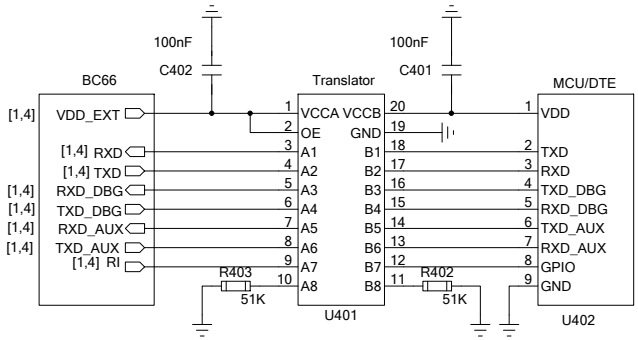


Notes:

1. When there is a SMS or URC output, the module will inform DTE with the RI pin.
2. Please pay attention to the level matching issue of UART ports during application.
3. Please note that the voltage level translator requires VCCA ≤ VCCB.

## UART Level Translation - Transistor Solution

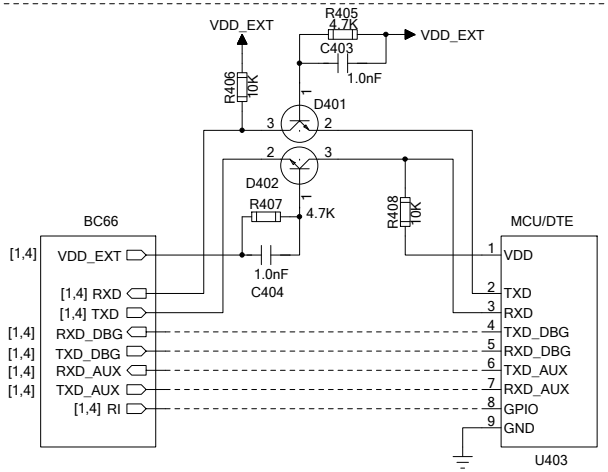


Notes:

1. When there is a SMS or URC output, the module will inform DTE with the RI pin.
2. Please pay attention to the level matching issue of UART ports during application.
3. The circuit design of dotted line section can refer to the design of solid line section, but please pay attention to the direction of connection.

## Recommended Test Points for Firmware Upgrade

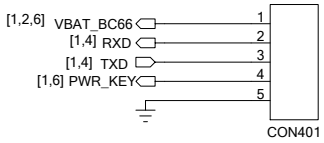


Please pay attention to the level matching issue of the port during application.

## Recommended Test Points for UART Ports

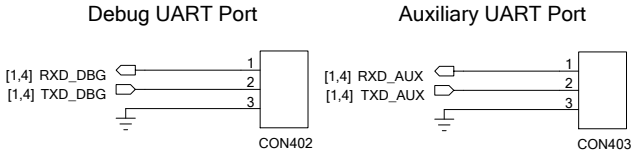


Please pay attention to the level matching issue of UART ports during application.

| Quectel Wireless Solutions | | |
|---|---|---|
| DRAWN BY Speed SUN | PROJECT BC66 | TITLE Reference Design |
| CHECKED BY Storm BAO | SIZE A2 | VER 1.1 |
| | SHEET 4 OF 6 | DATE 2019/2/21 |

# USB Interface Design

## USB Download Circuit

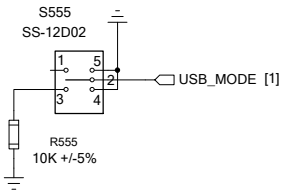


| Pin | USB Download Mode | Catch Log via USB |
|---|---|---|
| USB_MODE | Connect the pin to GND with a 10KΩ pull-down resistor | NC |

## USB Circuit

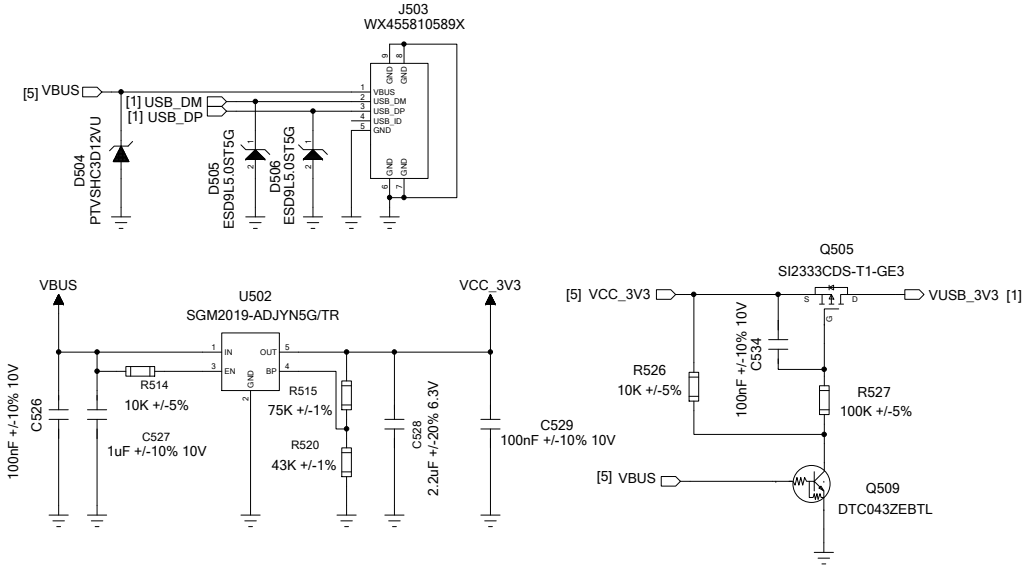


Notes:

1. The USB interface and thereof signal traces should be kept away from power supply, RF interface and other sensitive signal traces.
2. The impedance of USB signal traces should be controlled as 90Ω.
3. It is recommended to select TVS diodes with parasitic capacitance less than 3pF for USB signal lines, and place the them close to the USB connector.

| Quectel Wireless Solutions | | |
|---|---|---|
| DRAWN BY Speed SUN | PROJECT BC66 | TITLE Reference Design |
| CHECKED BY Storm BAO | SIZE A2 | VER 1.1 |
| | SHEET 5 OF 6 | DATE 2019/2/21 |

# MCU Control and Drive Circuits

## PSM_EINT Reference Circuit

PSM_EINT can be used to wake up the module from PSM.

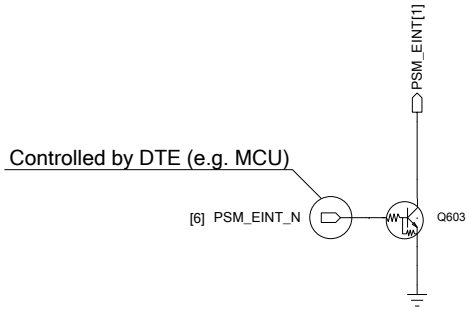


## PWRKEY Reference Circuit

MCU Application

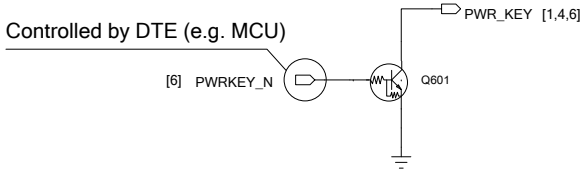


Keystroke Application

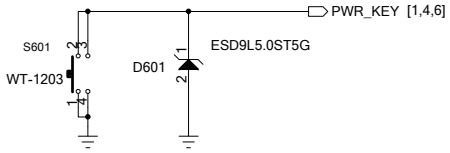


## MCU GPIO

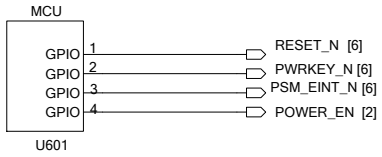


## Network Status Indication

The NETLIGHT pin is used to indicate network status.

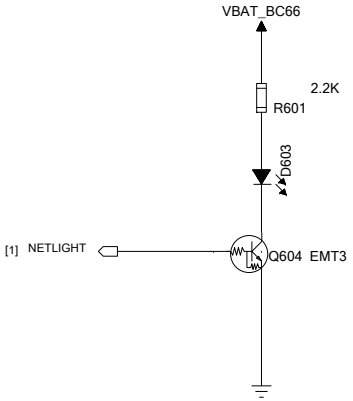


## Reset Reference Circuit

MCU Application

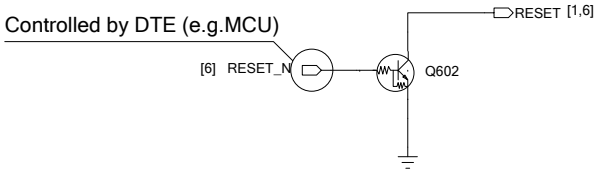


Keystroke Application

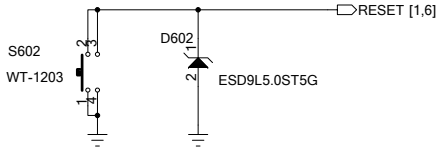


| Quectel Wireless Solutions | | |
|---|---|---|
| DRAWN BY Speed SUN | PROJECT BC66 | TITLE Reference Design |
| CHECKED BY Storm BAO | SIZE A2 | VER 1.1 |
| | SHEET 6 OF 6 | DATE 2019/2/21 |