IP-X5

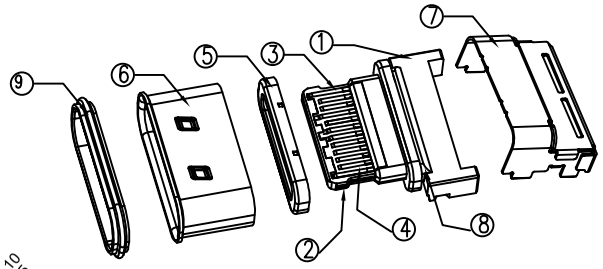


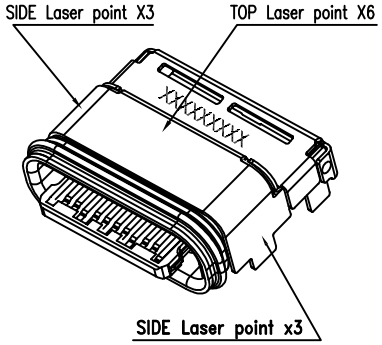


1.ELECTRICAL CHARACTERISTICS;
1.1 CONTACT RESISTANCE: 40mΩ Max FOR INITIAL. 10mΩ CHANGE AFTER TEST. MEASURE AT 20mV, 100mA.
1.2 CONTACT CURRENT RATING: 5A FOR COLLECTIVELY POWER SUPPLY PIN(PINA1,A4,A9,A12,B1,B4,B9,B12); 1.25A FOR VCONN PIN; 0.25A FOR OTHER SIGNAL PIN.
1.3 DIELECTRIC WITHSTANDING VOLTAGE: 100V AC R.M.S.
1.4 INSULATION RESISTANCE 100MΩ Min
1.5 OPERATING TEMPERATURE: -40°C ～ 85°C
2 MECHANICAL CHARACTERISTICS:
2.1 MATING FORCE: 5~20 N.
2.2 UNMATED FORCE: 8~20N INITIAL TEST; 6~20N DURABILITY AFTER TEST
2.3 DURABILITY: 10,000 CYCLES

USB TYPE-C FULL-FEATURED RECEPTACLE INTERFACE PIN ASSIGNMENTS

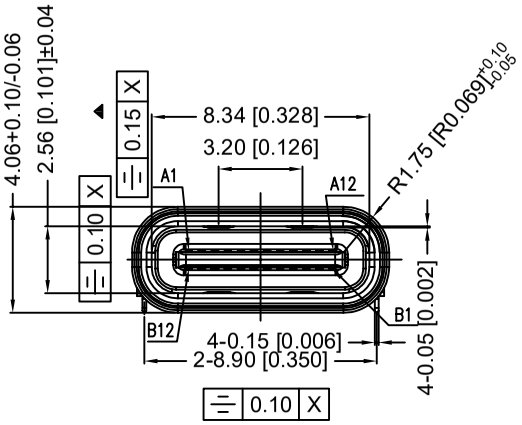


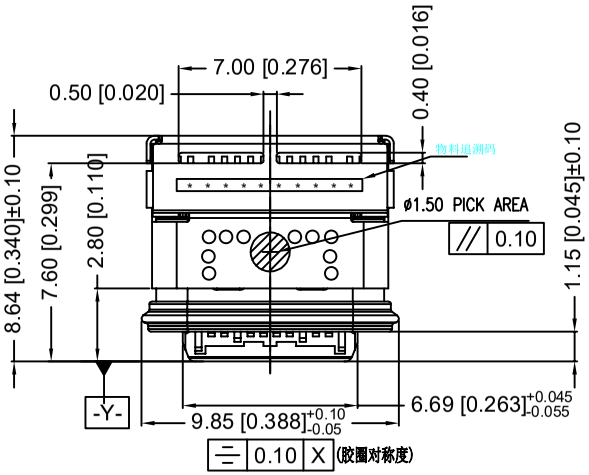


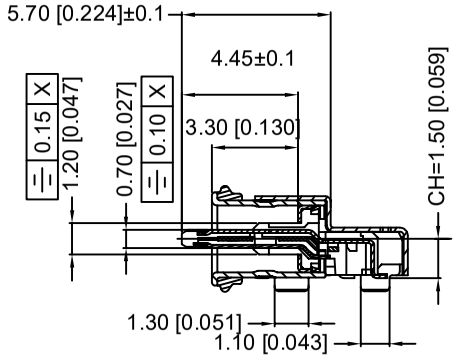


SECTION C-C(SC 1:1)

| PIN | Signal Name | Description | PIN | Signal Name | Description |
|---|---|---|---|---|---|
| A1 | GND | Ground return | B12 | GND | Ground return |
| A2 | SSTXp1 | Positive half of first SuperSpeed TX differential pair | B11 | SSRXp1 | Positive half of first SuperSpeed RX differential pair |
| A3 | SSTXn1 | Negative half of first SuperSpeed TX differential pair | B10 | SSRXn1 | Negative half of first SuperSpeed RX differential pair |
| A4 | VBUS | Bus Power | B9 | VBUS | Bus Power |
| A5 | CC1 | Configuration Channel | B8 | SBU2 | Sideband Use (SBU) |
| A6 | Dp1 | Positive half of the USB 2.0 differential pair-Position 1 | B7 | Dn2 | Negative half of the USB 2.0 differential pair-Position 2 |
| A7 | Dn1 | Negative half of the USB 2.0 differential pair-Position 1 | B6 | Dp2 | Positive half of the USB 2.0 differential pair-Position 2 |
| A8 | SBU1 | Sideband Use(SBU) | B5 | CC2 | Configuraation Channel |
| A9 | VBUS | Bus Power | B4 | VBUS | Bus Power |
| A10 | SSRXn2 | Negative half of second SuperSpeed RX differential pair | B3 | SSTXn2 | Negative half of second SuperSpeed TX differential pair |
| A11 | SSRXp2 | Positive half of second SuperSpeed RX differential pair | B2 | SSTXp2 | Positive half of second SuperSpeed TX differential pair |
| A12 | GND | Ground return | B1 | GND | Ground return |

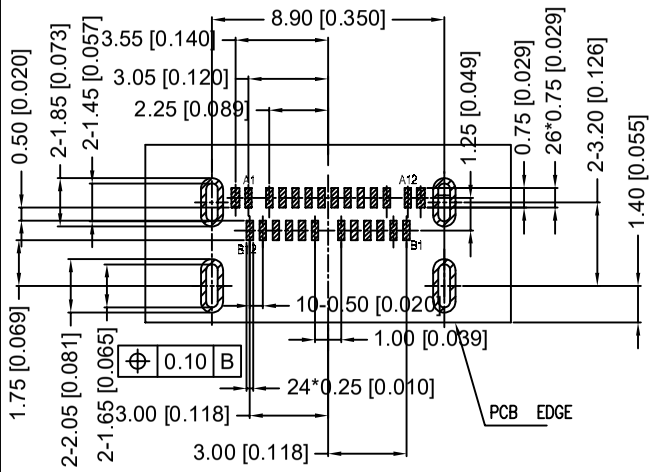


RECOMMENDED PCB LAYOUT
(Tolerance=±0.05)

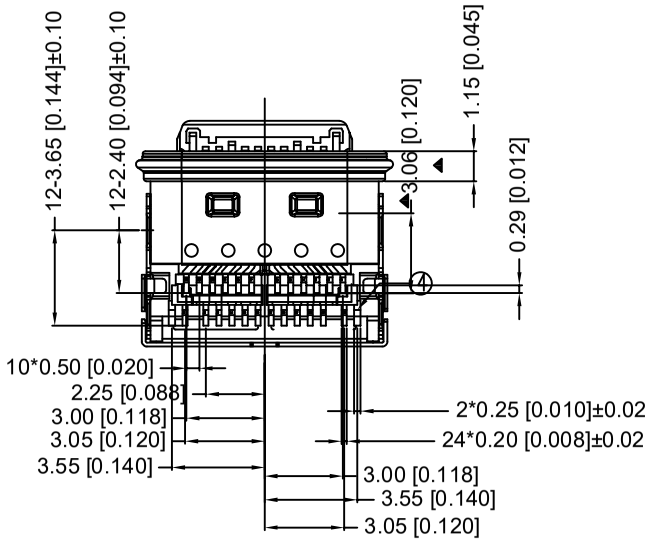


| 项目 | 组成部件 | 用量 | 材质/处理 | 备注 |
|---|---|---|---|---|
| 9 | 密封圈 | 1PCS | 硅胶,依照客户需求 | |
| 8 | 胶水 | 1PCS | 环氧胶 黑色 | |
| 7 | 外壳 | 1PCS | SUS304 ,T=0.15.镀镍50u″ MIN. | |
| 6 | 内拉伸壳 | 1PCS | SUS304,T=0.20. | |
| 5 | EMI拉伸壳 | 1PCS | SUS304 ,T=0.12.镀镍50u″ MIN. | |
| 4 | 上排端子 | 1SET | C18400,T=0.12.底层镀镍 50-100u″,功能接触区单面 | |
| 3 | 下排端子 | 1SET | 刷镀 Au 3u″,焊接区双面镀金 G/F. | |
| 2 | 中板 | 1PCS | SUS301-1/4 H, 镀镍50u″ MIN. | |
| 1 | 塑胶 | 1PCS | PA46(HFX315) BLACK | |

| MARK | DESCRIPTION | DATE | REVISED | APPROVED |
|---|---|---|---|---|
| | | | | |
| ΔX | | | | |
| ΔX | | | | |
| ΔX | | | | |

REVISIONS

| UNSPECIFIED TOLERANCES | |
|---|---|
| ANGLAR | ±5° |
| L≤ 4 | ±0.2 |
| 4<L≤ 16 | ±0.3 |
| 16<L≤ 63 | ±0.4 |
| L> 63 | ±0.5 |

XKB

| | | | |
|---|---|---|---|
| DSND | | SCALE: N/A | MODEL TYPE: |
| DWN | | VIEW: | PART NO.: USB31-24XN-4BSK21-A |
| CHKD | | UNIT: mm/in | DWG NO.: |
| APPD | | SIZE: A4 | |

XKB INDUSTRIAL PRECISION CO.,LIMITED

| WEIGHT | SHEET | REVISION |
|---|---|---|
| | 1/1 | A0 |