1.PHYSICAL CHARACTERISTICS(mm)

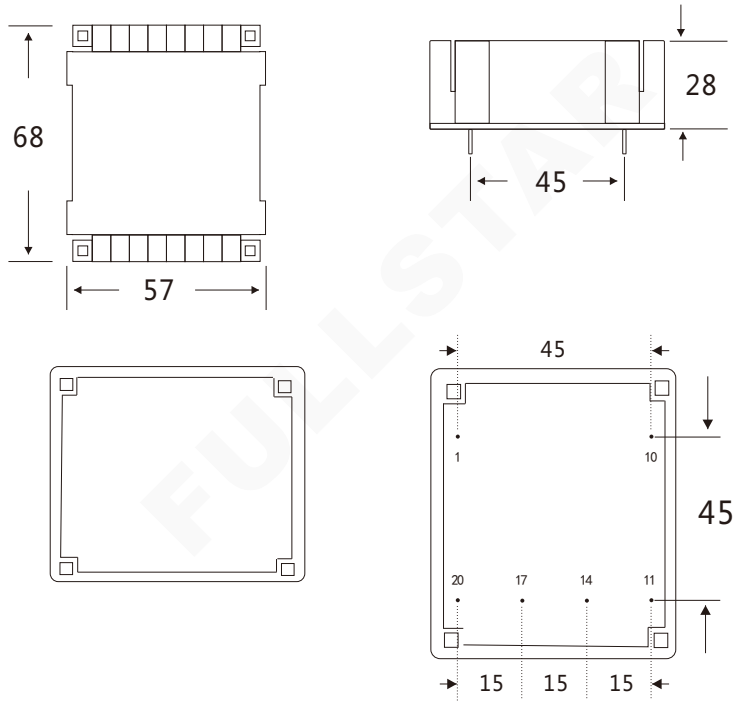

2.RECOMMENDED LAND PATTERN

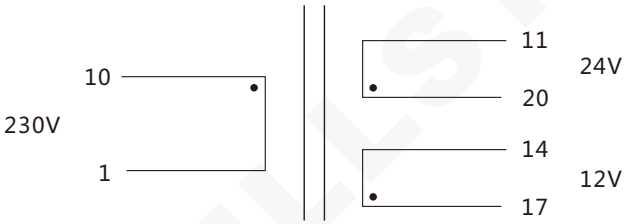

3.ELECTRONICAL SPECIFICATIONS

NO	ITEM	TEST CONDITION	MEASUREMENTS
1	PRIMARY RATED VOLTGE & MAX EXCITING CURRENT	230VAC 50Hz	30MAX
2	UNLOAD VOLTAGE	AC±5%	26.5V±5% 13.8V±5%
3	LOADED VOLTAGE	AC±5%	24V±5% 12V±5%
4	HI-POT	PRI-CORE	1750VAC 1S
		PRI-SEC	1750VAC 1S
		SEC-CORE	2000VAC 2S
6	SEC	/	230VAC

NAME	BALUN TRANSFORMER			
CUSTOMER P/N			Date	2026-04-29
FULLSTAR P/N	UI3913101		Rev. A1	Page 1/2
Drawn. by :MingYue Ma		Checked. by :Zhi Xin Pu	Approve. by :Jie Sun	

Drawing changes		
	Rev.	
	Rev.	

SHAANXI FULLSTAR ELECTRONICS CO.,LTD
www.fullstartechs.com
Tel:86-029-86676405
Fax:86-029-86676405

FULLSTAR

*Environmental characteristics

Item	Test method
TEMPERATURE RISE	pai & secwindings temperature rise to 75MAX.At rared load.(Ta=25)
Hi-POT TEST	AC1750V 1second.(PRI-SEC&PRI-CORE) AC1750V for lmin or AC2000V for 2econd. (SEC-CORE)(CUT-OFF CURRENT 2mA)
INSULATION RESISTANCE TEST	By500VDC rester,100Mohm MIN for lmin(PRI-SEC PRI-CORE)
LIFE TEST	In an ambient temperature of 25℃，90-95%rh，applying a power ouroe of 220V 50HZ to primary with full ioad 8hous comtinuousty unit output normal the requirements of itme 1-2 & item3.
INDUCED VOLTANE	all secondaty open,prlmary should with stand 460V400HZ for 15 second without breakdown.
HUMIDTY TEST	after exposed to 40°C±2°C，90-95%RH for 48hours, and put it into normal amdient condition treated for 30minutes。the test result must be satified with item-3 & item4

FULLSTAR

NAME	BALUN TRANSFORMER			
CUSTOMER P/N			Date	2026-04-29
FULLSTAR P/N	UI3913101		Rev. A1	Page 2/2
Drawn. by :MingYue Ma		Checked. by :Zhi Xin Pu	Approve. by :Jie Sun	

Drawing changes		
	Rev.	
	Rev.	

SHAANXI FULLSTAR ELECTRONICS CO.,LTD
www.xfullstartechs.com
Tel:86-029-86676405
Fax:86-029-86676405