CAPACITOR DATASHEET

Customer: _____

Category: Aluminum electrolytic capacitor

Product Number: 10uf63v 5*11mm, 105℃ 3000H

MPN: XHL100M1JD05L11B

Customer Part No. _____

Date: _____

SUPPLIER			CUSTOMER		
APPROVER	AUDITOR	DESIGNER	APPROVER	AUDITOR	TESTER
Yaojun Lv	Xianchen Liu	Xianda Zong			

Dongguan Xuansn Electronic Tech Co.,Ltd

ADD: No.3,Xinhe road, Changan town,dongguan city,Guangdong province

TEL:0769-8166 8821 FAX:0769-2282 6791

Confirmed,please sign back

一. Construction

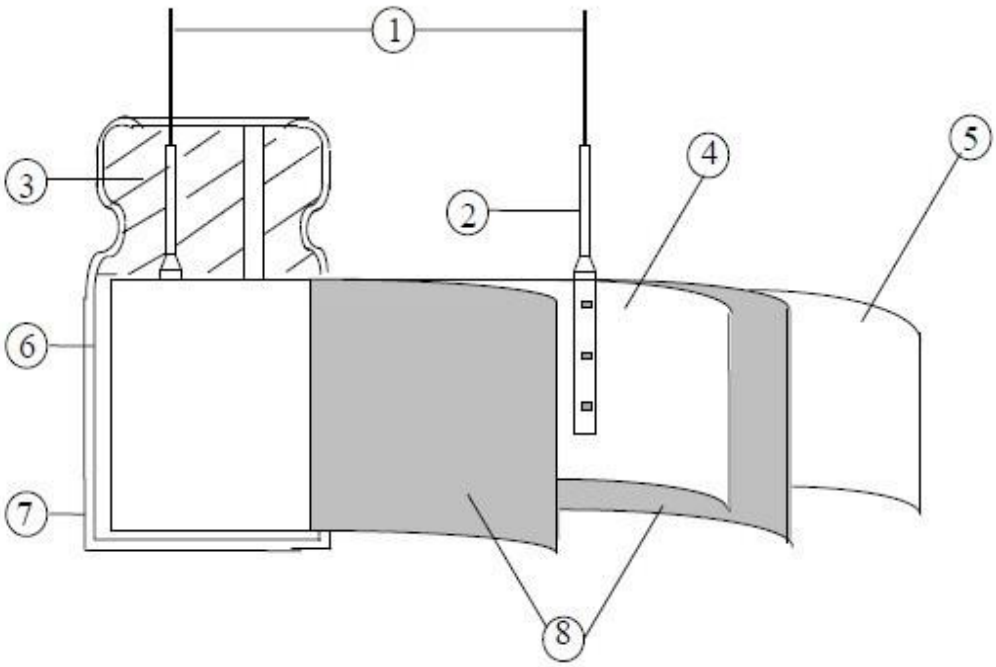

NO	Component	Material
1	Lead Line	Tinned CP wire (Pb Free)
2	Terminal	Aluminum wire
3	Sealing Material	Rubber
4	Al-Foil (+)	Formed aluminum foil
5	Case	Aluminum case
6	Sleeve	PVC/PET
7	Separator	Electrolyte paper
8	Al-Foil (-)	Etched aluminum foil

Marking

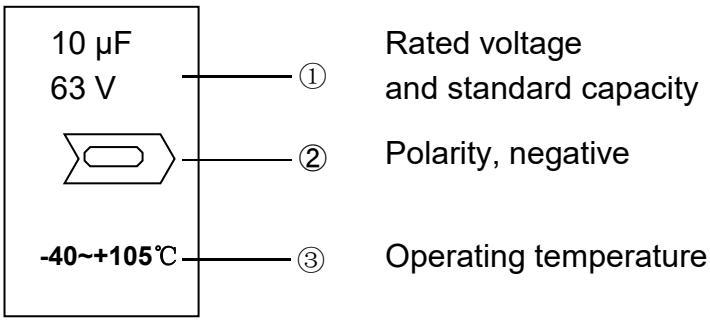

二. How to order

MPN:	XHL	100	M	1J	D05	L11	B
	①	②	③	④	⑤	⑥	⑦

1. Series

Code	Series
XHL	Low Impedance and Long Life

2. Rated Capacitance

Code	Capacitance/μf
100	10

3. Tolerance

Code	Tolerance(%)
M	±20%

4. Rated Voltage

Code	Voltage/V
1J	63

5. Diameter

Code	Diameter/mm
D05	5

6. Leight

Code	Leight/mm
L11	11

7. Packaging

Code	Packaging
B	Bulk Packing

三. Items

Model	10uf63v	Size	D05*L11mm
Lead Pitch	2.5 ±0.5mm	Lead DIA	0.5 ±0.05mm

Φd=0.05 Tinned copper-ply wire

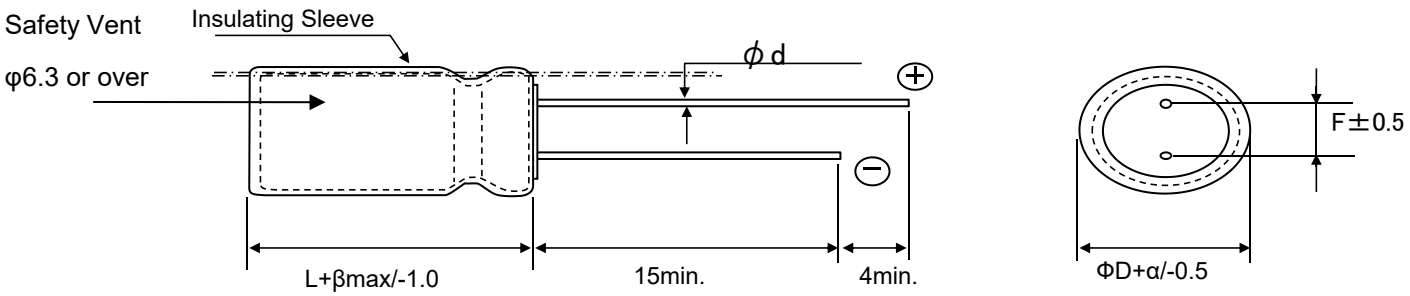

Unit(mm)

φD+0.5Max	L±1.5	F±0.5	d±0.05
5	11	2.5	0.5

Item	Capacitance Tolerance)	Tanδ 120Hz (20℃)	L.C. (μA,2min)	ESR @20℃ (Ω,100KHz)	Max Ripple Current(mA,r.m.s) /100KHz，105℃	Operating Temp. (℃)	Surge Valtage (V)
No.	**-20%~+20%**	**8%**	**12.6**	**2.500**	**81**	**-40~+105℃**	**78**
1	9.58	2.66	4.20				
2	9.62	2.68	4.21				
3	9.62	2.58	4.06				
4	9.59	2.59	4.08				
5	9.56	2.62	4.13				
6	9.65	2.68	4.22				
7	9.57	2.57	4.04				
8	9.54	2.58	4.07				
9	9.56	2.51	3.95				
10	9.62	2.62	4.12				
MAX	9.62	2.68	4.22				
MIN	9.56	2.51	3.95				
AVE	9.59	2.61	4.11				

四. Capacitance characteristics

1.Properties of the ripple current

①.Frequency coefficient

Cap(μF) \ Freq.(HZ)	50	120	1K	10K	100K
10	0.7	0.85	0.9	0.95	1

Temperature/℃	40	60	70	85	105
Factor	2.4	2.1	1.78	1.65	1

2.Rated Value And Characteristic

Item	Performance	Test method
Leakage current	≦0.01CV (μA, after 2 minutes)	+20℃,max.
Static Capacitance	-20%~+20%	Measuring frequency: 120HZ±20% Measuring voltage: ≤0.5Vrms,1.5~2.0VDC
Dissipation Factor (tanδ)	Not to exceed the value specified	at 20℃，120Hz
Stability at low temperature	Impedance ratio at 120Hz: WV: 63 Z(-25℃)/Z(+20℃): 2 Z(-40℃)/Z(+20℃): 3	

High temperature load life	Leakage current	≤the value specified in table 1	Test temp: 105 ± 2℃ Applied voltage: rated voltage With the rated Ripple Current Test time 3000 (+100/-0 hours)
	Change in capacity	≤±20% of initial value	
	dissipation Factor	≤200% of value specified in table 1	
	Appearance	No remarkable abnormality	
High temperature no load characteristics	Leakage current	≤the value specified in table 1	Test temp: 105 ± 2℃ No voltage applied Test time:1000 hours (+24/-0 hours)
	Change in capacity	≤±20% of initial value	
	Dissipation Factor	≤200% of value specified in table 1	
	Appearance	No remarkable abnormality	

Surge voltage	Item	Performanc
	Leakage current	≤the initial specified value
	Change in capacity	≤±15% against value before test
	Dissipation Factor	≤the initial specified value
	Appearance	No remarkable abnormality
	Test temp: 15~35℃ Test volt: surge volt specified in 2 voltage apply. 1000 times of charge for 30±5sec,under frequency of 6±0.5sec,and discharge for 5min 30sec.	

<table>
<tr><td rowspan="4">Vibration resistance</td><td colspan="2">Capacitance</td><td colspan="2">Stability requirements</td></tr>
<tr><td colspan="2">Change in capacity</td><td colspan="2">≤±5 % of the specified initial value.</td></tr>
<tr><td colspan="2">Appearance</td><td colspan="2">No remarkable abnormality</td></tr>
<tr><td colspan="4">Frequency:10~55HZ/1min,width of vibration,1.5mmdirection and duration X,Y and Z directions, each for 2 hours.(Total 9 hours)</td></tr>
<tr><td rowspan="4">Endurance</td><td>Leakage current</td><td>Not to exceed the value specified</td><td rowspan="4">Soldering temp: 280±5℃
Soldering time: 10±1 sec</td></tr>
<tr><td>Capacitance Change</td><td>Within ±20% of the value before test</td></tr>
<tr><td>Dissipation Factor</td><td>Not to exceed 150% of the value specified</td></tr>
<tr><td>ESR</td><td>Not to exceed 150% of the value specified</td></tr>
<tr><td rowspan="4">Resistance to humidity</td><td>Leakage current</td><td>Not to exceed the value specified</td><td rowspan="4">Stored at 60℃，RH90~95%，1000h</td></tr>
<tr><td>Capacitance Change</td><td>Within ±20% of the value before test</td></tr>
<tr><td>Dissipation Factor)</td><td>Not to exceed 150% of the value specified</td></tr>
<tr><td>ESR</td><td>Not to exceed 150% of the value specified</td></tr>
</table>