EG06 Series&EG060V-EA

Difference Introduction

LTE-A Module Series

Version: 1.0

Date: 2021-05-24

Status: Released

Our aim is to provide customers with timely and comprehensive service. For any assistance, please contact our company headquarters:

Quectel Wireless Solutions Co., Ltd.
Building 5, Shanghai Business Park Phase III (Area B), No.1016 Tianlin Road, Minhang District, Shanghai 200233, China
Tel: +86 21 5108 6236
Email: info@quectel.com

Or our local office. For more information, please visit:
http://www.quectel.com/support/sales.htm.

For technical support, or to report documentation errors, please visit:
http://www.quectel.com/support/technical.htm
Or email to support@quectel.com.

General Notes

Quectel offers the information as a service to its customers. The information provided is based upon customers' requirements. Quectel makes every effort to ensure the quality of the information it makes available. Quectel does not make any warranty as to the information contained herein, and does not accept any liability for any injury, loss or damage of any kind incurred by use of or reliance upon the information. All information supplied herein is subject to change without prior notice.

Disclaimer

While Quectel has made efforts to ensure that the functions and features under development are free from errors, it is possible that these functions and features could contain errors, inaccuracies and omissions. Unless otherwise provided by valid agreement, Quectel makes no warranties of any kind, implied or express, with respect to the use of features and functions under development. To the maximum extent permitted by law, Quectel excludes all liability for any loss or damage suffered in connection with the use of the functions and features under development, regardless of whether such loss or damage may have been foreseeable.

Duty of Confidentiality

The Receiving Party shall keep confidential all documentation and information provided by Quectel, except when the specific permission has been granted by Quectel. The Receiving Party shall not access or use Quectel's documentation and information for any purpose except as expressly provided herein. Furthermore, the Receiving Party shall not disclose any of the Quectel's documentation and information to any third party without the prior written consent by Quectel. For any noncompliance to the above requirements, unauthorized use, or other illegal or malicious use of the documentation and information, Quectel will reserve the right to take legal action.

Copyright

About the Document

Revision History

Version	Date	Author	Description
-	2021-04-19	King MA	Creation of the document
1.0	2021-05-24	Jada LIN/ Eysen WANG	First official release

Contents

Table Index

Figure Index

1 Introduction

EG06 series and EG060V-EA are designed as compatible modules. This document describes the main differences between EG06 series and EG060V-EA in terms of hardware and software designs.

1.1. Special Mark

Table 1: Special Mark

Mark	Definition
*	Unless otherwise specified, when an asterisk (*) is used after a function, feature, interface, pin name, AT command, or argument, it indicates that the function, feature, interface, pin, AT command, or argument is under development and currently not supported; and the asterisk (*) after a model indicates that the sample of such model is currently unavailable.

2 Hardware Comparison

2.1. Product Description

The following table shows the general information of EG06 series and EG060V-EA for comparison.

Table 2: Module General Information

Module	Appearance	Packaging	Dimensions (mm)	Description
EG06 series		299-pin LGA	37.0 × 39.5 × 2.8	LTE-A **Cat 6** LTE-FDD/ LTE-TDD/ WCDMA
EG060V-EA		299-pin LGA	37.0 × 39.5 × 3.05	LTE-A **Cat 6** LTE-FDD/ LTE-TDD/ WCDMA

2.2. Feature Overview

The following table shows the general properties and features of EG06 series and EG060V-EA for comparison.

Table 3: Feature Overview

Feature	EG06 series	EG060V-EA
Power Supply	3.3–4.3 V Typ. 3.8 V	3.3–4.3 V Typ. 3.8 V
Transmitting Power	Class 3 (24 dBm +1/-3 dB) for WCDMA bands	Class 3 (24 dBm +1/-3 dB) for WCDMA bands

	Class 3 (23 dBm ±2 dB) for LTE-FDD bands Class 3 (23 dBm ±2 dB) for LTE-TDD bands	Class 3 (23 dBm ±2 dB) for LTE-FDD bands [1)] Class 3 (23 dBm ±2 dB) for LTE-TDD bands
RF Feature	1. Supports B32 2. Supports both continuous and non-continuous intra-band CA	1. Does not support B32 2. Supports continuous intra-band CA, but not non-continuous intra-band CA
Peak Current	**VBAT_BB:** Max 0.8 A **VBAT_RF:** Max 1.2 A	**VBAT_BB:** Max 1.5 A **VBAT_RF:** Max 0.5 A [2)]
Sleep Current	**OFF state** 12 µA @ power down **Sleep state:** 1.64 mA @ WCDMA PF = 512 2.68 mA @FDD PF = 128 2.69 mA @TDD PF = 128 **Idle state:** 20.31 mA @ WCDMA PF = 64 22.3 mA @ FDD PF = 64 21.8 mA @ TDD PF = 64	**OFF state** 10 µA @ power down **Sleep state:** 2.607 mA @ WCDMA PF = 512 3.643 mA @ FDD PF = 128 3.539 mA @ TDD PF = 128 **Idle state:** 29.29 mA @ WCDMA PF = 64 29.87 mA @ FDD PF = 64 29.89 mA @ TDD PF = 64
Temperature Range	**Operating temperature range:** -35 to +75 °C [3)] **Extended temperature range:** -40 to +85 °C [4)] **Storage temperature range:** -40 to +90 °C	**Operating temperature range:** -20 to + 55 °C [3)] **Extended temperature range:** -25 to +60 °C [4)] **Storage temperature range:** -40 to +90 °C
Main UART Interface	**Baud rates:** 4800 bps; 9600 bps; 19200 bps; 38400 bps; 57600 bps; 115200 bps (default); 230400 bps; 460800 bps; 921600 bps **Flow control:** RTS/CTS **Signal level:** 1.8 V	**Baud rates:** 4800 bps; 9600 bps; 19200 bps; 38400 bps; 57600 bps; 115200 bps (default); 230400 bps; 460800 bps; 921600 bps **Flow control:** RTS/CTS **Signal level:** 1.8 V
Debug UART Interface	**Debug UART interface:** ● Used for Linux console and log output	**Debug UART interface:** ● Used for Linux console and log output

	● 115200 bps baud rate	● 115200 bps baud rate
Bluetooth UART Interface	● Used for Bluetooth communication and can be multiplexed into SPI interface ● 115200 bps baud rate	Not supported
Antenna Interface	ANT_MAIN ANT_DIV ANT_GNSS	ANT_MAIN ANT_DRX RESERVED
Rx-diversity	Support LTE/WCDMA Rx-diversity	Support LTE Rx-diversity
UMTS Features	DC-HSDPA: Max. 42 Mbps (DL) HSUPA: Max. 5.76 Mbps (UL)	HSDPA: Max 21 Mbps (DL) [5)] HSUPA: Max 5.76 Mbps (UL)
USB Interface	USB 2.0 & USB 3.0	USB 2.0
PCIe Interface*	Comply with PCI Express Specifications Revision 2.1	● Supported and used for data transmission ● Comply with PCI Express Specifications Revision 1.0
Digital Audio	PCM	PCM
I2C Interface	Supported	Supported
SPI Interface	Supported (Bluetooth UART interface multiplexed as SPI)	Supported
ADC	Two ADCs	Two ADCs
Voltage at ADC	0.15 V to VBAT_BB	0–1.4 V
(U)SIM Card	Single (U)SIM Card 1.8/3.0 V	Single (U)SIM Card 1.8/3.0 V
(U)SIM Card Detection	Supported	Supported
SD Card Interface*	Supported	Supported
Firmware Upgrade	USB, DFOTA	USB, FOTA

NOTES

1. [1)] For LTE FDD Band 3, the transmitting power is 21.5 dBm ±1 dB.
2. [2)] The current consumption is tested in 3G/4G instead of 2G environment.
3. [3)] Within operating temperature range, the module meets 3GPP specifications.
4. [4)] Within extended temperature range, the module keeps the ability to transmit data, without any unrecoverable malfunction. Radio spectrum and radio network will not be influenced, while one or

more parameters, such as P_{out}, may reduce in value and exceed the specified tolerances of 3GPP. When the temperature returns to normal operating temperature levels, the module will meet 3GPP specifications again.

5. [5)] DC-HSDPA can be used, but the throughput speed and connection stability has yet to be optimized.
6. Characters in red indicates differences.

2.3. Power Supply

The following table illustrates the peak current difference between EG06 series and EG060V-EA.

Table 4: Peak Current Difference

Feature	EG06 series	EG060V-EA
Peak Current	**VBAT_BB:** Max 0.8 A **VBAT_RF:** Max 1.2 A	**VBAT_BB:** Max 1.5 A **VBAT_RF:** Max 0.5 A[1)]

Power design is crucial for both EG06 series and EG060V-EA, as the performance of a module largely depends on the stability and suitability of its power source. The power supply should be able to provide a current of at least 2.0 A. If the voltage drop between the input and output is not extremely high, it is recommended that an LDO be used while supplying power to the module. If there is a big voltage difference between the input source and the desired output (VBAT), a buck converter is recommended in place of the LDO.

NOTE

[1)] The current consumption is tested in 3G/4G instead of 2G environment.

The following figure shows the reference design for a +5 V input power supply. In this design, the output of the power supply is about 3.8 V and the maximum load current is 3 A.

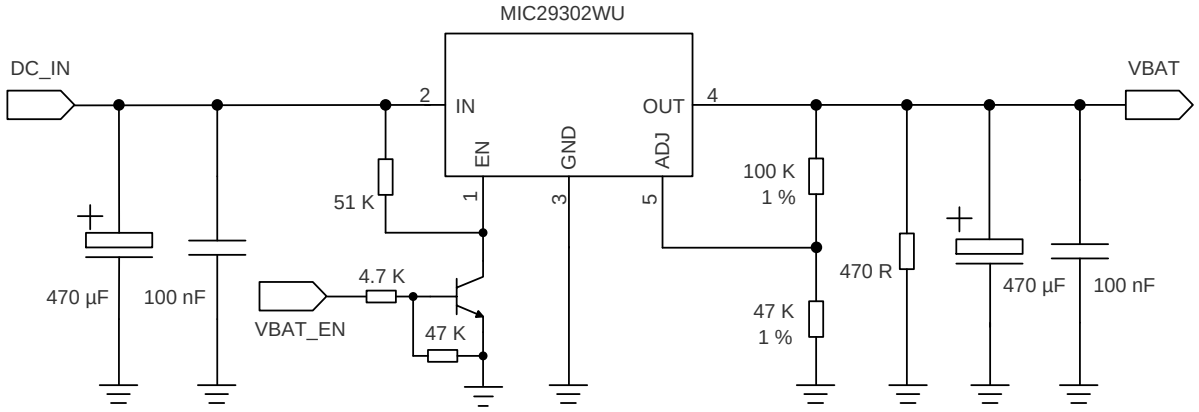

Figure 1: Reference Design of Power Supply

NOTE

To avoid any damage to the internal flash, please do not switch off the power supply when the module works normally. The power supply cannot be cut off until the module is shut down with PWRKEY or AT command.

2.4. Pin Definition Differences

The following figure shows the pin distribution of EG06 series and EG060V-EA.

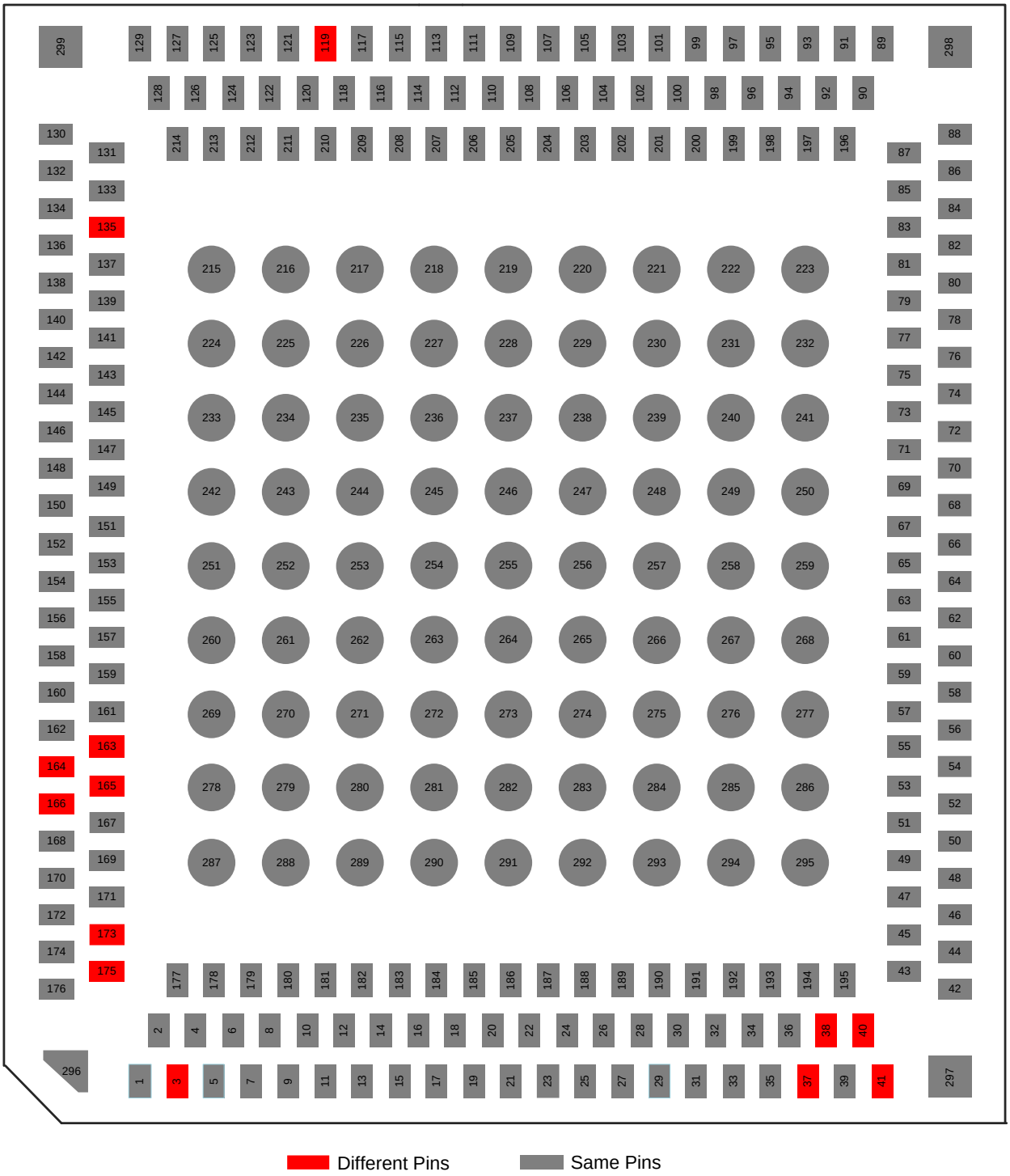

Figure 2: Pin Distribution (Top View)

The following table describes the pin definition differences between EG06 series and EG060V-EA.

Table 5: Pin Definition Differences

Pin No.	EG06 series	EG060V-EA	Comment
	Pin Name	Pin Name	
3	BT_EN	RESERVED	
37	USB_SS_TX_M	RESERVED	USB 3.0 is not supported by EG060V-EA.
38	USB_SS_TX_P	RESERVED	
40	USB_SS_RX_P	RESERVED	
41	USB_SS_RX_M	RESERVED	
119	ANT_GNSS	RESERVED	GNSS is not supported by EG060V-EA.
135	VDD_P2	RESERVED	EG060V-EA: The SD card and eMMC functions do not require the VDD_P2 pin.
163	BT_TXD	SPI_MOSI	EG06 series: Bluetooth UART interface multiplexed into SPI. EG060V-EA: Only SPI function is supported.
164	BT_CTS	SPI_CLK	
165	BT_RXD	SPI_MISO	
166	BT_RTS	SPI_CS	
173	ADC0	ADC0	Voltage range: EG06 series: 0.15 V to VBAT_BB EG060V-EA: 0 V to 1.4 V
175	ADC1	ADC1	

2.4.1. USB Interface

EG06 series provides one integrated Universal Serial Bus (USB) interface which complies with the USB 3.0/2.0 specifications and supports super-speed (5 Gbps) mode on USB 3.0, high-speed (480 Mbps) and full-speed (12 Mbps) modes on USB 2.0. The USB interface is used for AT command communication, data transmission, GNSS NMEA sentence output, software debugging, firmware upgrade and voice over USB*.

EG060V-EA provides one integrated Universal Serial Bus (USB) interface which complies with the USB 2.0 specifications and supports full-speed (12 Mbps) and high-speed (480 Mbps) modes. The USB interface can only serve as a slave component and is used for AT command communication, data transmission, software debugging and firmware upgrade.

Table 6: USB Interface Differences

EG06 series			EG060V-EA		
Pin No.	**Pin Name**	**Comment**	**Pin No.**	**Pin Name**	**Comment**
34	USB_DP	USB 2.0	34	USB_DP	USB 2.0
33	USB_DM		33	USB_DM	
32	USB_VBUS		32	USB_VBUS	
36	USB_ID*	OTG identification	36	USB_ID*	USB ID detect
38	USB_SS_TX_P	USB 3.0	38	RESERVED	USB 3.0 is not supported. Keep these pins unconnected.
37	USB_SS_TX_M		37	RESERVED	
40	USB_SS_RX_P		40	RESERVED	
41	USB_SS_RX_M		41	RESERVED	
143	OTG_PWR_EN*	OTG power control	143	OTG_PWR_EN*	OTG power control
35	GND		35	GND	

2.4.2. ANT_GNSS Antenna Interface

EG06 series provides a fully integrated global navigation satellite system solution that supports Gen8C Lite of Qualcomm (GPS, GLONASS, BeiDou, Galileo and QZSS). The module supports standard NMEA-0183 protocol, and outputs NMEA sentences at 1 Hz data update rate via USB interface. The GNSS engine of the module is switched off by default and can only be switched on via AT command. For more details about the GNSS engine technology and configurations, see ***document [1]***.

EG060V-EA does not support GNSS functions and the pin on it corresponding with the ANT_GNSS pin on EG06 series is a reserved one.

Table 7: Difference Between Pins 119

EG06 series			EG060V-EA		
Pin No.	**Pin Name**	**Comment**	**Pin No.**	**Pin Name**	**Comment**
119	ANT_GNSS	GNSS antenna interface	119	RESERVED	Keep this pin unconnected.

2.4.3. Pin 135

Table 8: Difference Between Pins 135

EG06 series			EG060V-EA		
Pin No.	**Pin Name**	**Comment**	**Pin No.**	**Pin Name**	**Comment**
135	VDD_P2	If an SD card is used, connect VDD_P2 to SD_VDD. If no SD card is used, connect VDD_P2 to VDD_EXT.	135	RESERVED	Keep this pin unconnected.

2.4.4. SPI Interface

EG06 series provides one SPI interface multiplexed from the Bluetooth UART interface. The interface only supports master mode with a maximum clock frequency of 50 MHz.

EG060V-EA only has an SPI interface but no Bluetooth UART interface.

Table 9: SPI Interface of EG06 series

EG06 series			
Pin No.	**Pin Name**	**Description**	**Comment**
3	BT_EN	BT function enable control	1.8 V power domain. If unused, keep these pins open.
163	BT_TXD	Can be multiplexed into SPI_MOSI	
164	BT_CTS	Can be multiplexed into SPI_CLK	
165	BT_RXD	Can be multiplexed into SPI_MISO	
166	BT_RTS	Can be multiplexed into SPI_CS	

Table 10: SPI interface of EG060V-EA

EG060V-EA			
Pin No.	**Pin Name**	**Description**	**Comment**
163	SPI_MOSI	Not multiplexed from BT_TXD	EG060V-EA only has an SPI

164	SPI_CLK	Not multiplexed from BT_CTS	interface but no Bluetooth UART interface.
165	SPI_MISO	Not multiplexed from BT_RXD	
166	SPI_CS	Not multiplexed from BT_RTS	

2.4.5. ADC Interface

Both EG06 series and EG060V-EA have two Analog-to-Digital Converter (ADC) interfaces. **AT+QADC=0** and **AT+QADC=1** can be executed to read the voltage value on ADC0 and ADC1 respectively.

To improve the accuracy of ADC, ADC traces should be shielded through grounding to avoid interference.

Table 11: Pin Difference Between ADC Interfaces

EG06 series			EG060V-EA		
Pin No.	**Pin Name**	**Comment**	**Pin No.**	**Pin Name**	**Comment**
173	ADC0	Voltage range: 0.15 V to VBAT_BB	173	ADC0	Voltage range: 0 to 1.4 V
175	ADC1		175	ADC1	

NOTES

1. EG06 series: The input voltage of ADC should not exceed VBAT_BB.
2. EG060V-EA: The input voltage of ADC should not exceed 1.4 V.
3. It is prohibited to supply any voltage to ADC pins when VBAT is removed.
4. It is recommended to use a resistor divider circuit for ADC application.

3 Software Comparison

3.1. AT Command Differences

Table 12: AT Command Differences

EG06	EG060V-EA
Read Command **AT+QTEMP**	Read Command **AT+QTEMPDBG=0**
Response **<temp>,<temp>,<temp>** **OK**	Response **<temp>** **OK**

Difference Description: Responses of **AT+QTEMP** and **AT+QTEMPDBG=0** are different.

- **EG06**

The temperature values of XO crystals, BB chip and PA chip are returned.

- **EG060V-EA**

Only the temperature value of BB chip is returned.

NOTE

For more details of the AT command differences, see ***document [3]*** and ***document [4]***.

4 Appendix References

Table 13: Related Documents

SN	Document Name	Comment
[1]	Quectel_EG06_Hardware_Design	EG06 Hardware Design
[2]	Quectel_EG060V-EA_Hardware_Design	EG060V-EA Hardware Design
[3]	Quectel_EP06&EG06&EM06_AT_Commands_Manual	AT Commands Manual for EP06, EG06 and EM06
[4]	Quectel_EG060V-EA_AT_Commands_Manual	AT Commands Manual for EG060V-EA

Table 14: Terms and Abbreviations

Abbreviation	Description
3GPP	3rd Generation Partnership Project
ADC	Analog-to-Digital Converter
CTS	Clear to Send
DC-HSDPA	Dual-carrier High Speed Downlink Packet Access
DFOTA	Delta Firmware Upgrade Over-the-Air
eMMC	Embedded Multimedia Card
FOTA	Firmware Upgrade Over-the-Air
FDD	Frequency Division Duplex
GLONASS	Global Navigation Satellite System (Russia)
GNSS	Global Navigation Satellite System
HSDPA	High Speed Downlink Packet Access

LDO	Low Dropout Regulator
LGA	Land Grid Array
LTE	Long Term Evolution
OTG	On-The-Go
PCM	Pulse Code Modulation
QZSS	Quasi-Zenith Satellite System
RF	Radio Frequency
RTS	Request to Send
SPI	Serial Peripheral Interface
TDD	Time Division Duplex
USB	Universal Serial Bus
(U)SIM	(Universal) Subscriber Identity Module
VBAT	Voltage at Battery (Pin)
WCDMA	Wideband Code Division Multiple Access